The “Stork” drone

Prof. Dr. R. KIEFER

INSA INSTITUT NATIONAL DES SCIENCES APPLIQUÉES STRASBOURG

Hochschule Offenburg
offenburg.university

Content

- **Common ELCOD drones specifications**
- Presentation of the Stork design
- Introduction to the fuel cell propulsion system
- Global view of the embedded electronic (most common to our two drones)
- Presentation of the Pixhawk open source project and ground station
- Flight photos and videos.

Principal load specifications of ELCOD project

Specifications commun to both drones of the ELCOD project

- MTOW (Maximal take off weight) : 25kg
- Maximal wing load : 150 g/dm²
- Minimum cruise speed : 90 km/h
- Minimum vertical climbing speed : 2.5m/s
- Max payload mass : 5kg

Two proposal of design

- **INSA plane design with two tail tube (the Stork)**
- **IUAS flying wing design (the Delta)**

The objective of the project is to compare the two design and flight advantages or possibilities. Electronic structure and communication system will be the same.

Propulsion :

- INSA will test an H2 fuel cell version and a specific 4 stroke motor
- IUAS is focused on the optimisation of a thermal engine

ELCOD team at INSA

Team :

- 3 research professors :
  - Renaud KIEFER (Project leader)
  - François GEISKOPF
  - Marc VEDRINES
- 2 Engineers :
  - Martin LEFEBVRE (Mechanical)
  - Thomas PAVOT (Electrical)
- postdoctoral :
  - Ana Carolina DOS SANTOS PAULINO
- Students (End master project) :
  - Thibault Wolf, Antoine MURIE

INSA's Design choice

Goal:

Endurance and range

Design :

Two tail airplane

Wingspan : 5 m

Max Wing loading : 150 g/dm²

Wing aspect ratio : 15

Motor : 2500W

Sketch – Prototype

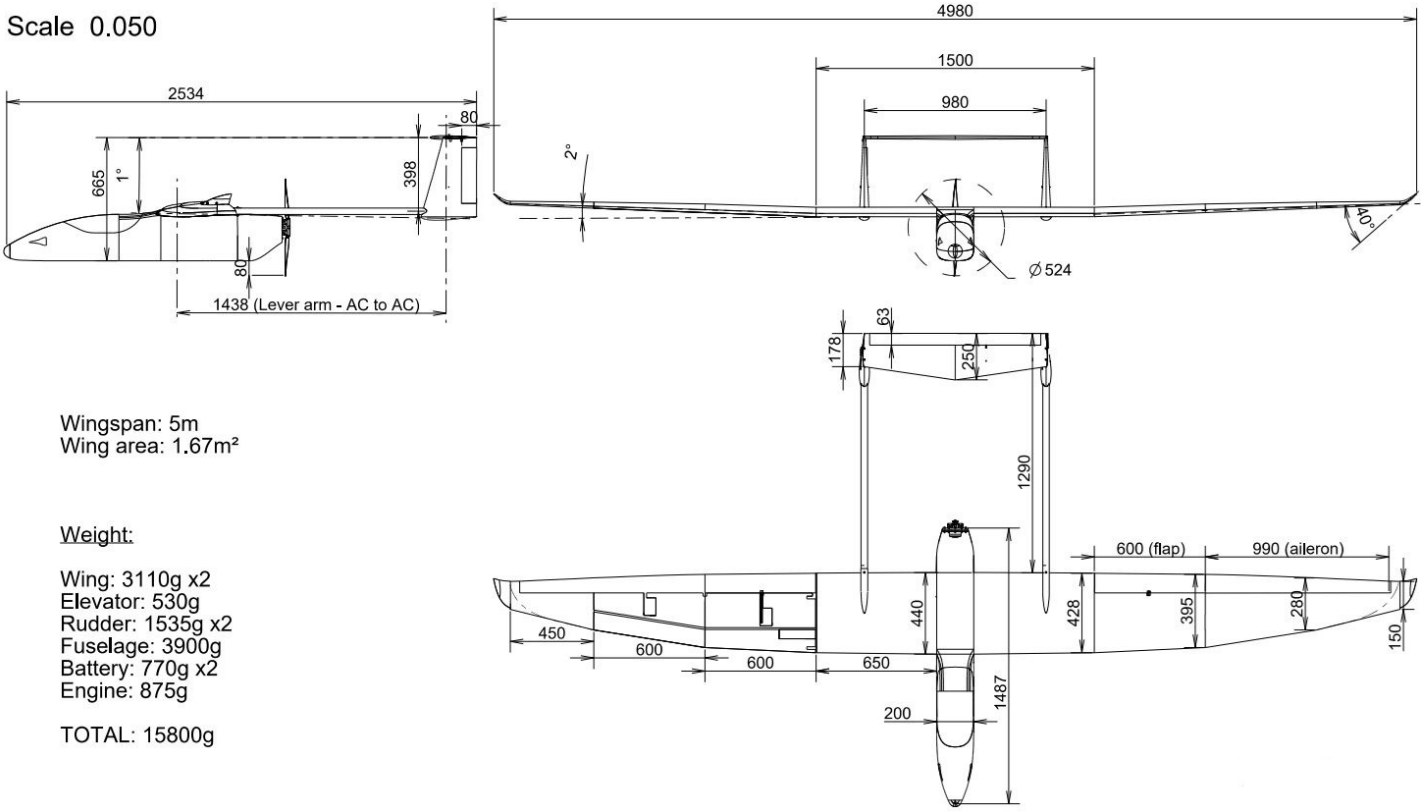

Wingspan: 5m
Wing area: 1.67m²

Weight:

Wing: 3110g x2
Elevator: 530g
Rudder: 1535g x2
Fuselage: 3900g
Battery: 770g x2
Engine: 875g

TOTAL: 15800g

Mechanical CAD - Assembly

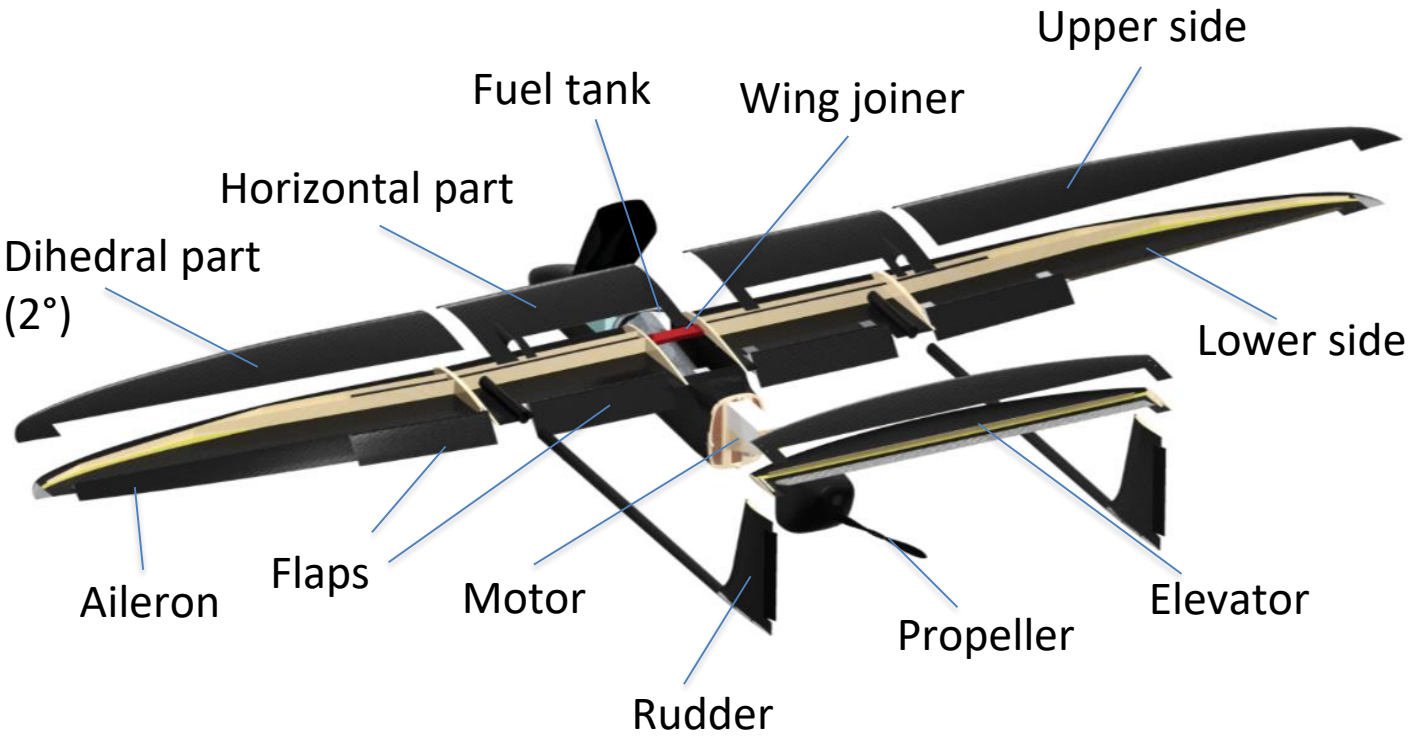

Sketch – Prototype

Exhibition - *Strasbourg May 2019*

Flight test

Sketch – Final version

Scale 0.050

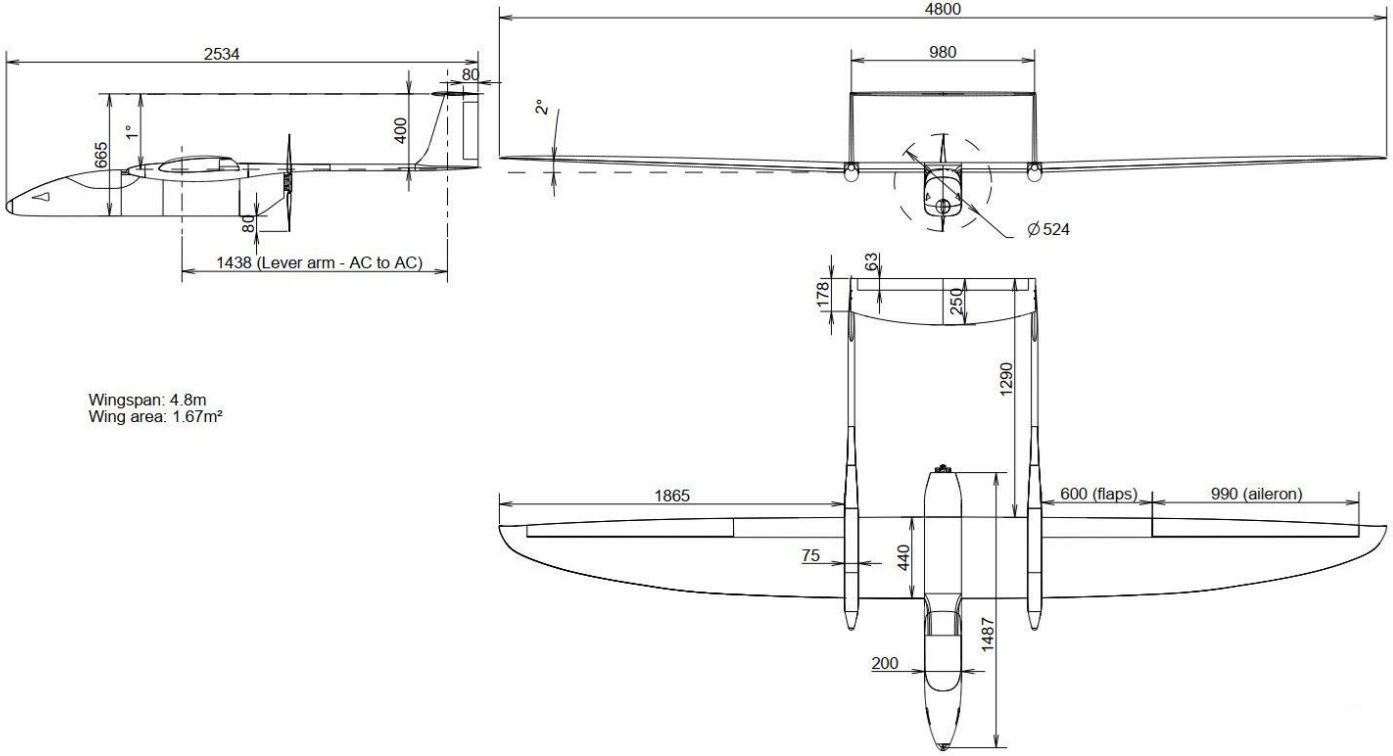

Wingspan: 4.8m
Wing area: 1.67m²

Future version

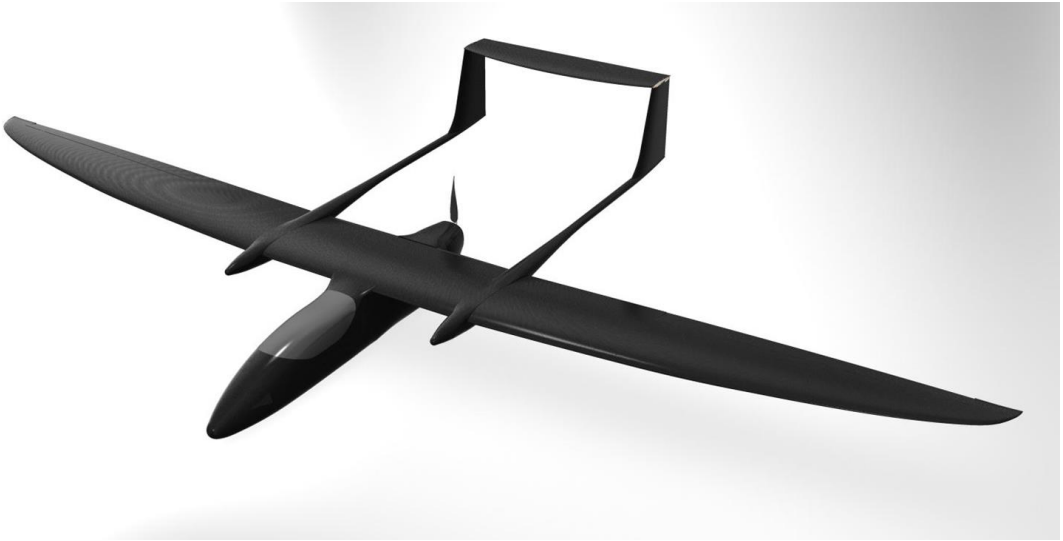

- Introduction of a retractable landing gear
- lateral fuselage to put some specific sensors (magnetic)

Future version

Study of the possibility to integrate 4 motors in the lateral fuselages for VTOL capabilities

Prototype estimated performance

With a mass of 25 kg at 90 km/h in horizontal flight (NM32 airfoil):

- Flight needed power : 360 W
- With an efficiency of 70 % (motor + propellers), electrical power required : 514 W

Power during the climb phase : 2000 W

(Rate of climb : 4 m/s)

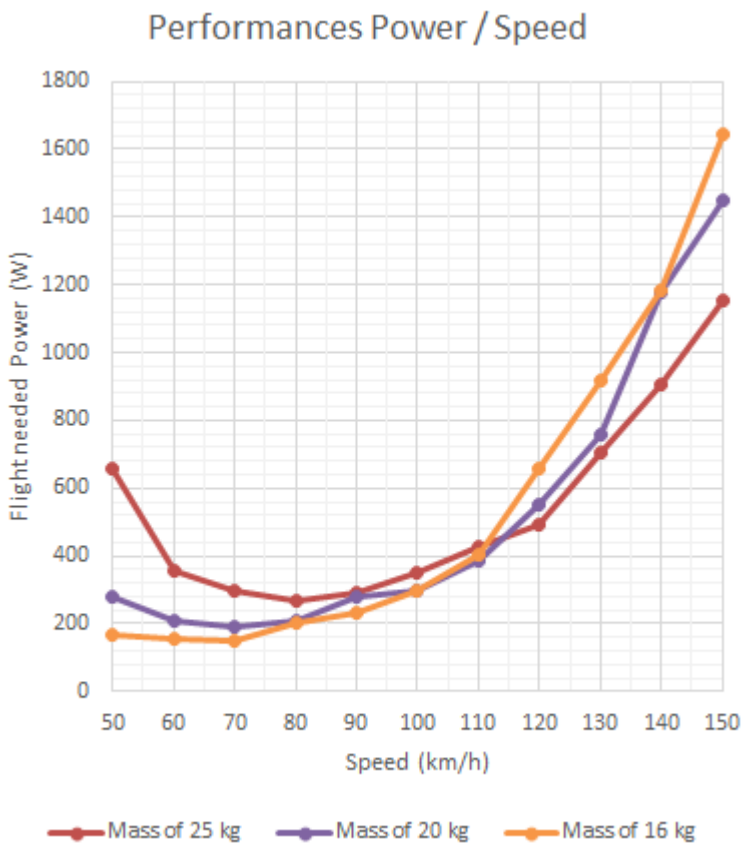

Fuel cell technology

INSA INSTITUT NATIONAL DES SCIENCES APPLIQUÉES STRASBOURG

Hochschule Offenburg
offenburg.university

Fuel cell technology

Pros :

- clean propulsion during the flight
- Electrical energy

Cons :

- Less endurance than thermal engine
- Use Hydrogen at 200 to 300 Bar

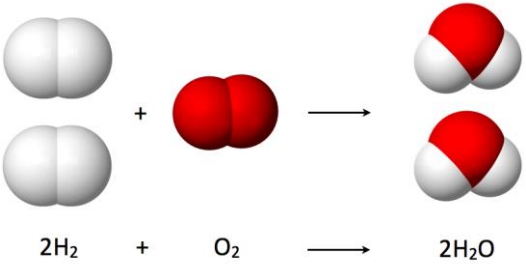

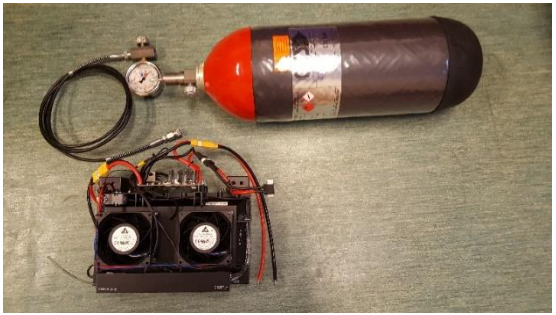

Expected performances with Fuel Cell

If the drone has a mass of :

- **25 kg** with a cruising speed of 90 km/h:

514 W → 4h30

aprox 400 km range

- **16 kg** with a cruising speed of 90 km/h:

385 W → 6h20

560 km range

Hydrogen tank

Fuel cell (1000 W)

Electrical motor

LiPo 8S

Fuel cell integration

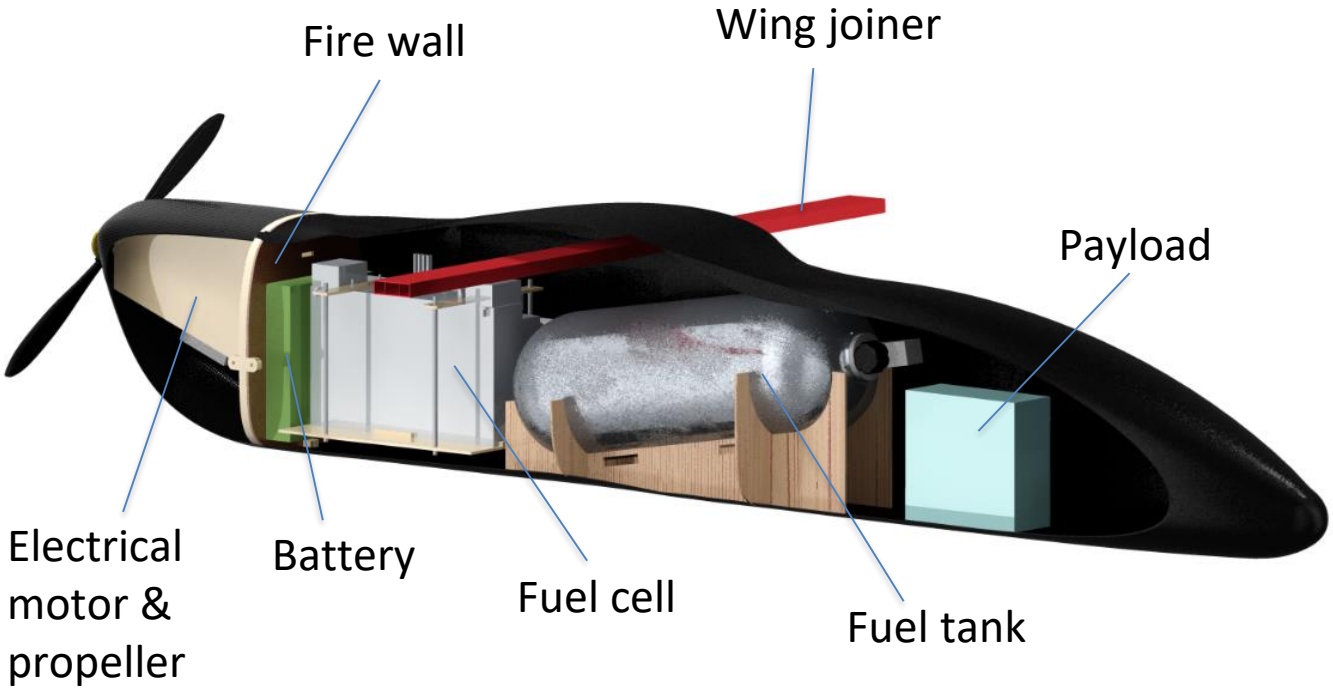

Electronic and open source ground station

INSA INSTITUT NATIONAL DES SCIENCES APPLIQUÉES STRASBOURG

Hochschule Offenburg
offenburg.university

Flight controller : Pixhawk

- 32-bit ARM Cortex® M4 processor
- Gyroscope, accelerometer, magnetometer, pressure sensor
- 14 servo motors outputs
- Communication protocol UART, I2C, CAN
- GPS and external magnetometer
- Open source code
- possibility to change the code, add some sensors…

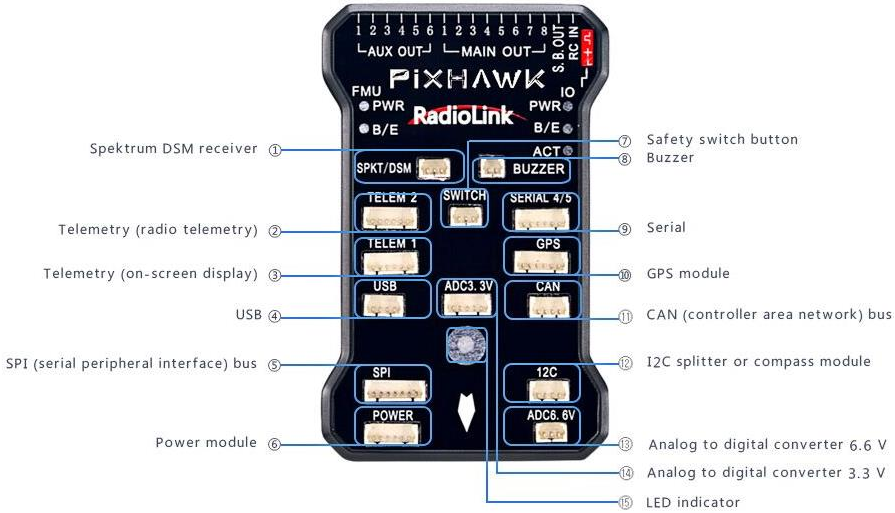

Electronic on ELCOD Drone (Stork)

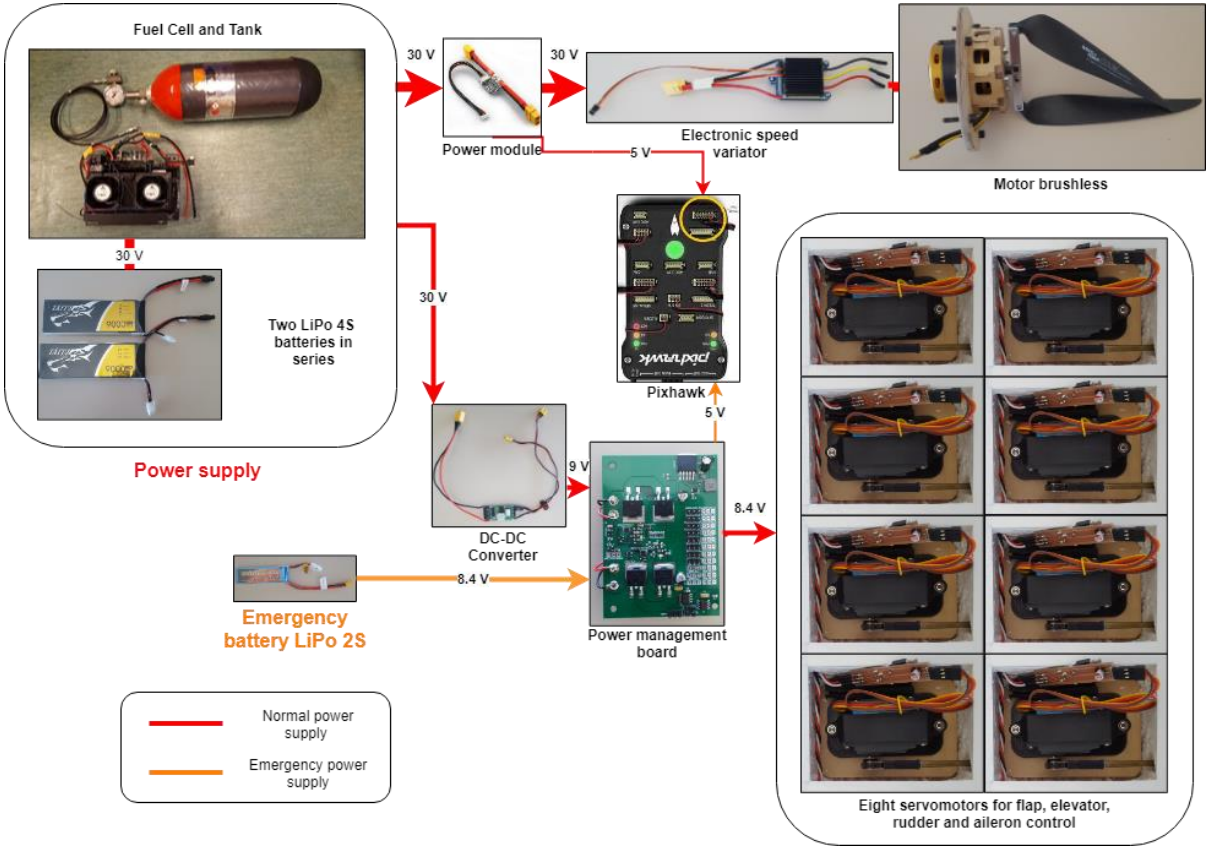

Communication schematic

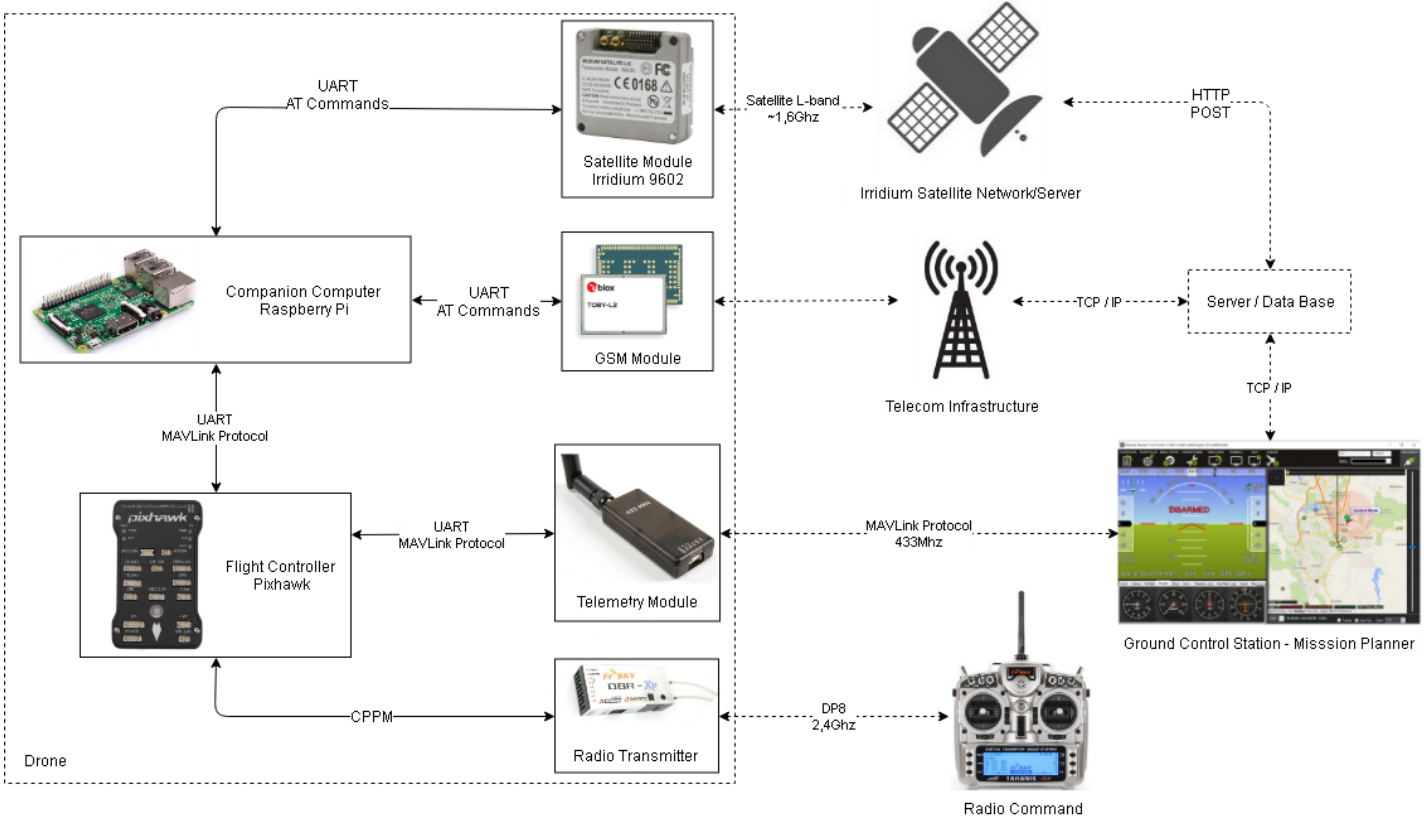

Ground control station :
- Mission Planner
- QGround control

- Open source software
- Use Mavlink UAV communication protocol
- Plan, save and load autonomous missions
- Download and analyze mission logs

Thank you for your attention!

elcad sky solution